FIG-19

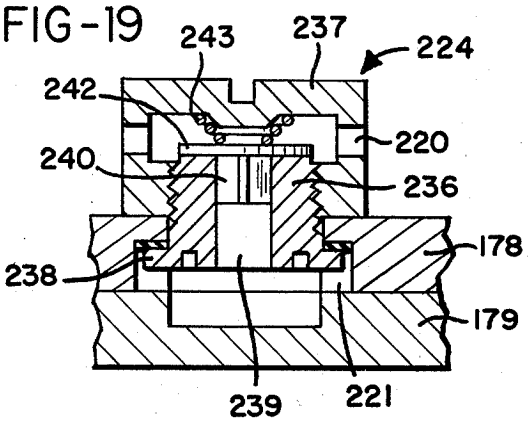

FIG-20

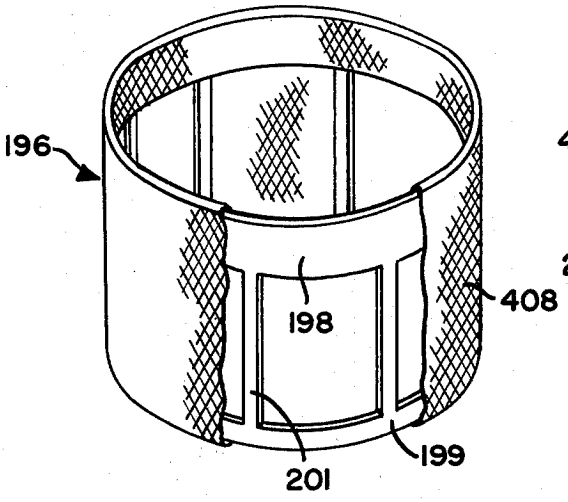

FIG-21

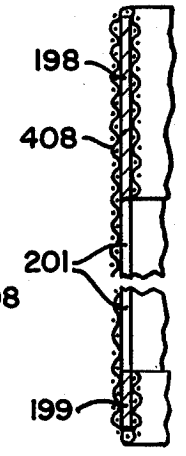
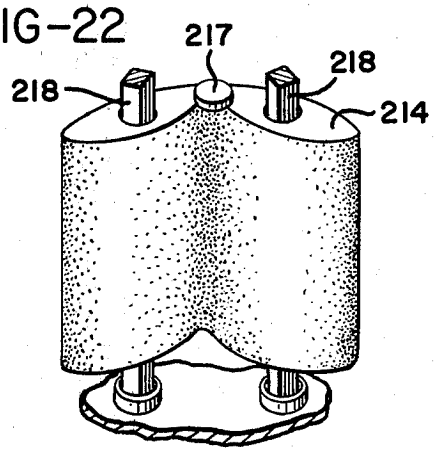
FIG-22